UNIVERSITY OF CAMBRIDGE INTERNATIONAL EXAMINATIONS
General Certificate of Education
Advanced Subsidiary Level and Advanced Level

PHYSICS **9702/11**

Paper 1 Multiple Choice **May/June 2013**

1 hour

Additional Materials: Multiple Choice Answer Sheet
Soft clean eraser
Soft pencil (type B or HB is recommended)

1388964283

READ THESE INSTRUCTIONS FIRST

Write in soft pencil.
Do not use staples, paper clips, highlighters, glue or correction fluid.
Write your name, Centre number and candidate number on the Answer Sheet in the spaces provided unless this has been done for you.
DO **NOT** WRITE IN ANY BARCODES.

There are **forty** questions on this paper. Answer **all** questions. For each question there are four possible answers **A**, **B**, **C** and **D**.
Choose the **one** you consider correct and record your choice in **soft pencil** on the separate Answer Sheet.

Read the instructions on the Answer Sheet very carefully.

Each correct answer will score one mark. A mark will not be deducted for a wrong answer.
Any working should be done in this booklet.
Electronic calculators may be used.

This document consists of **24** printed pages.

© UCLES 2013

Data

speed of light in free space, $c = 3.00 \times 10^{8}\,\text{m s}^{-1}$

permeability of free space, $\mu_0 = 4\pi \times 10^{-7}\,\text{H m}^{-1}$

permittivity of free space, $\varepsilon_0 = 8.85 \times 10^{-12}\,\text{F m}^{-1}$

$\left(\dfrac{1}{4\pi\varepsilon_0} = 8.99 \times 10^{9}\,\text{m F}^{-1}\right)$

elementary charge, $e = 1.60 \times 10^{-19}\,\text{C}$

the Planck constant, $h = 6.63 \times 10^{-34}\,\text{J s}$

unified atomic mass constant, $u = 1.66 \times 10^{-27}\,\text{kg}$

rest mass of electron, $m_\text{e} = 9.11 \times 10^{-31}\,\text{kg}$

rest mass of proton, $m_\text{p} = 1.67 \times 10^{-27}\,\text{kg}$

molar gas constant, $R = 8.31\,\text{J K}^{-1}\,\text{mol}^{-1}$

the Avogadro constant, $N_\text{A} = 6.02 \times 10^{23}\,\text{mol}^{-1}$

the Boltzmann constant, $k = 1.38 \times 10^{-23}\,\text{J K}^{-1}$

gravitational constant, $G = 6.67 \times 10^{-11}\,\text{N m}^2\,\text{kg}^{-2}$

acceleration of free fall, $g = 9.81\,\text{m s}^{-2}$

© UCLES 2013

Formulae

uniformly accelerated motion, $s = ut + \frac{1}{2}at^2$

$v^2 = u^2 + 2as$

work done on/by a gas, $W = p\Delta V$

gravitational potential, $\phi = -\frac{Gm}{r}$

hydrostatic pressure, $p = \rho gh$

pressure of an ideal gas, $p = \frac{1}{3}\frac{Nm}{V}\langle c^2 \rangle$

simple harmonic motion, $a = -\omega^2 x$

velocity of particle in s.h.m., $v = v_0 \cos \omega t$

$v = \pm \omega \sqrt{(x_0^2 - x^2)}$

electric potential, $V = \frac{Q}{4\pi\varepsilon_0 r}$

capacitors in series, $1/C = 1/C_1 + 1/C_2 + \ldots$

capacitors in parallel, $C = C_1 + C_2 + \ldots$

energy of charged capacitor, $W = \frac{1}{2}QV$

resistors in series, $R = R_1 + R_2 + \ldots$

resistors in parallel, $1/R = 1/R_1 + 1/R_2 + \ldots$

alternating current/voltage, $x = x_0 \sin \omega t$

radioactive decay, $x = x_0 \exp(-\lambda t)$

decay constant, $\lambda = \frac{0.693}{t_{\frac{1}{2}}}$

© UCLES 2013

[Turn over

1 Which pair of quantities contains one vector and one scalar quantity?

A displacement; force

B kinetic energy; power

C acceleration; momentum

D velocity; distance

2 One property Q of a material is used to describe the behaviour of sound waves in the material. Q is defined as the pressure P of the sound wave divided by the speed v of the wave and the surface area A of the material through which the wave travels:

$$Q = \frac{P}{vA}.$$

What are the SI base units of Q?

A $\mathrm{kg\,m^2\,s^{-3}}$ **B** $\mathrm{kg\,m^{-3}\,s^{-1}}$ **C** $\mathrm{kg\,m^{-4}\,s^{-1}}$ **D** $\mathrm{kg\,m^{-2}\,s^{-2}}$

3 A cannon fires a cannonball with an initial speed v at an angle α to the horizontal.

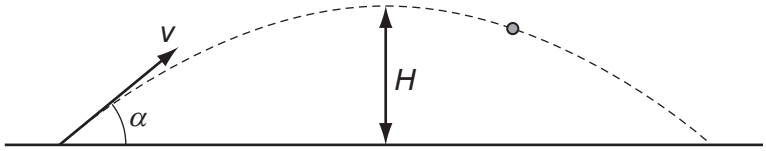

Which equation is correct for the maximum height H reached?

A $H = \frac{v \sin\alpha}{2g}$ **B** $H = \frac{g \sin\alpha}{2v}$ **C** $H = \frac{(v \sin\alpha)^2}{2g}$ **D** $H = \frac{g^2 \sin\alpha}{2v}$

Space for working

4 A wave has a frequency of 5 GHz.

What is the period of the wave?

A 20 000 μs

B 20 ns

C 2 ns

D 200 ps

5 In an experiment to determine the acceleration of free fall g, the period of oscillation T and length l of a simple pendulum were measured. The uncertainty in the measurement of l is estimated to be 4%, and the uncertainty in the measurement of T is estimated to be 1%.

The value of g is determined using the formula

$$g = \frac{4\pi^2 l}{T^2}.$$

What is the uncertainty in the calculated value for g?

A 2% **B** 3% **C** 5% **D** 6%

Space for working

6 The Y-input terminals of a cathode-ray oscilloscope (c.r.o.) are connected to a supply of amplitude 5.0 V and frequency 50 Hz. The time-base is set at 10 ms per division and the Y-gain at 5.0 V per division.

Which trace is obtained?

A

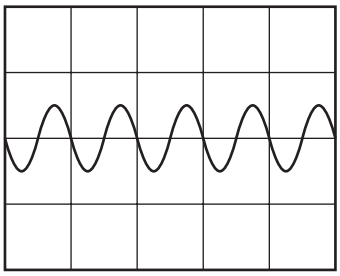

B

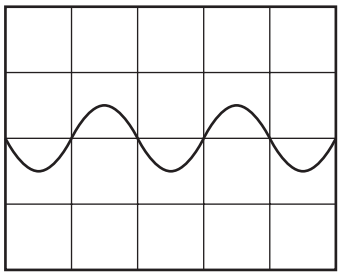

C

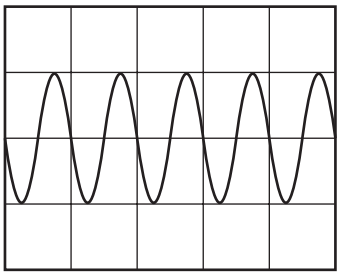

D

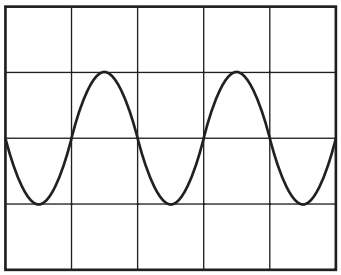

7 A body is released from rest and falls vertically in air of constant density.

Which statement about the motion of the falling body is correct?

A As it accelerates, its weight decreases so that its acceleration decreases until it travels with constant velocity.

B It accelerates initially at $9.8\,m\,s^{-2}$ but the drag force increases so its acceleration decreases.

C Its velocity increases at a constant rate until its velocity becomes constant.

D The drag force of the air increases continually and eventually the velocity decreases.

Space for working

© UCLES 2013

8 A goods train passes through a station at a steady speed of $10\,m\,s^{-1}$. An express train is at rest at the station. The express train leaves the station with a uniform acceleration of $0.5\,m\,s^{-2}$ just as the goods train goes past. Both trains move in the same direction on straight, parallel tracks.

How much time passes before the express train overtakes the goods train?

A 6 s **B** 10 s **C** 20 s **D** 40 s

9 A car is stationary at traffic lights. When the traffic lights go green, the driver presses down sharply on the accelerator. The resultant horizontal force acting on the car varies with time as shown.

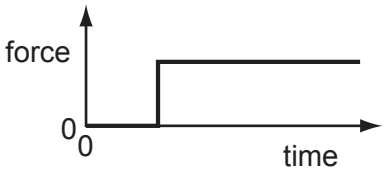

Which graph shows the variation with time of the speed of the car?

A

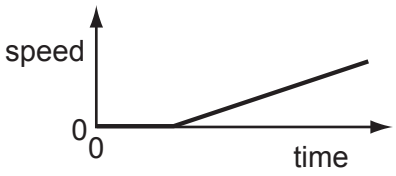

B

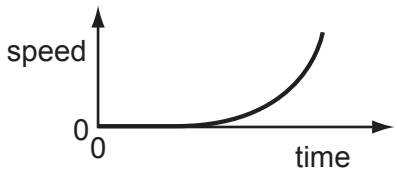

C

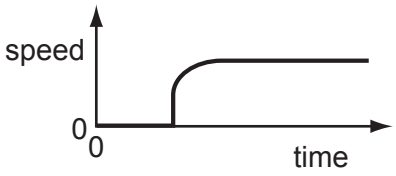

D

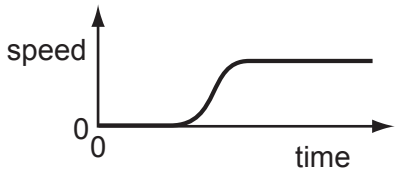

Space for working

10 Which of the following is a statement of the principle of conservation of momentum?

A In an elastic collision momentum is constant.

B Momentum is the product of mass and velocity.

C The force acting on a body is proportional to its rate of change of momentum.

D The momentum of an isolated system is constant.

11 A 2.0 kg mass travelling at $3.0\,m\,s^{-1}$ on a frictionless surface collides head-on with a stationary 1.0 kg mass. The masses stick together on impact.

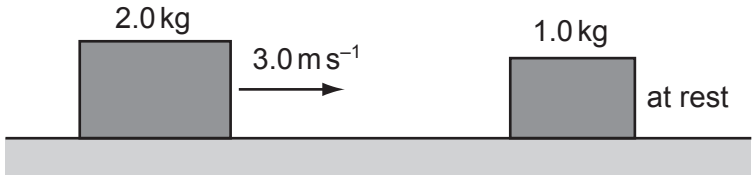

How much kinetic energy is lost on impact?

A zero **B** 2.0 J **C** 2.4 J **D** 3.0 J

12 A car of mass 750 kg has a horizontal driving force of 2.0 kN acting on it. It has a forward horizontal acceleration of $2.0\,m\,s^{-2}$.

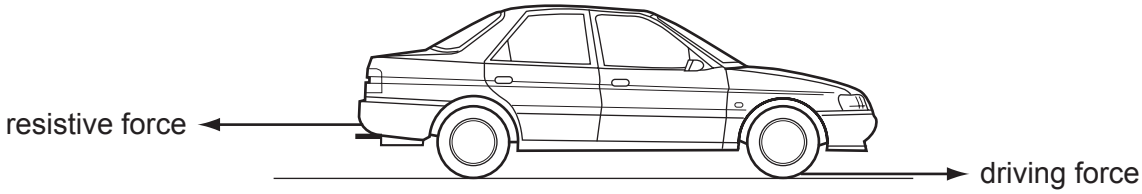

What is the resistive force acting horizontally?

A 0.50 kN **B** 1.5 kN **C** 2.0 kN **D** 3.5 kN

Space for working

© UCLES 2013

13 A small water droplet of mass 3.0 μg carries a charge of -6.0×10^{-11} C. The droplet is situated in the Earth's gravitational field between two horizontal metal plates. The potential of the upper plate is +500 V and the potential of the lower plate is –500 V.

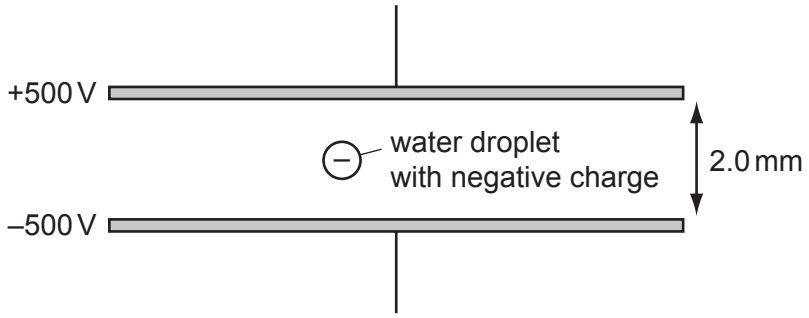

What is the motion of the droplet?

A It accelerates downwards.

B It remains stationary.

C It accelerates upwards.

D It moves upwards at a constant velocity.

14 A horizontal bar is supported on a pivot at its centre of gravity. A fixed load is attached to one end of the bar. To keep the bar in equilibrium, a force *F* is applied at a distance *x* from the pivot.

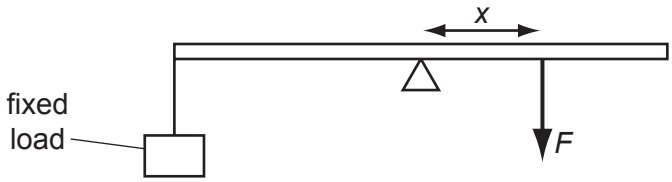

How does *F* vary with *x*?

A

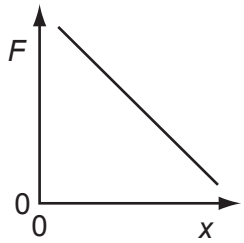

B

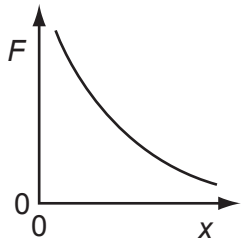

C

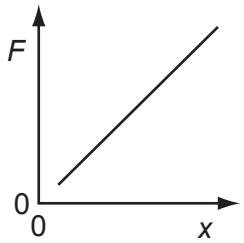

D

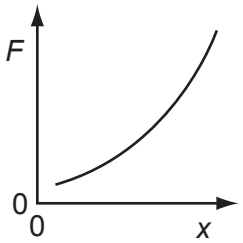

Space for working

15 The diagram represents a sphere under water. P, Q, R and S are forces acting on the sphere, due to the pressure of the water.

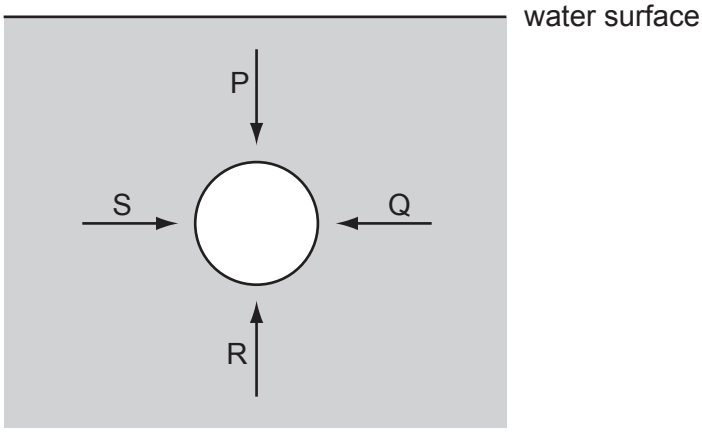

Each force acts perpendicularly to the sphere's surface. P and R act in opposite directions vertically. Q and S act in opposite directions horizontally.

Which information about the magnitudes of the forces is correct?

A $P < R$ and $S = Q$

B $P > R$ and $S = Q$

C $P = R$ and $S = Q$ and $P \neq S$

D $P = R$ and $S = Q$ and $P = S$

Space for working

16 A hinged trapdoor is held closed in the horizontal position by a cable.

Three forces act on the trapdoor: the weight *W* of the door, the tension *T* in the cable and the force *H* at the hinge.

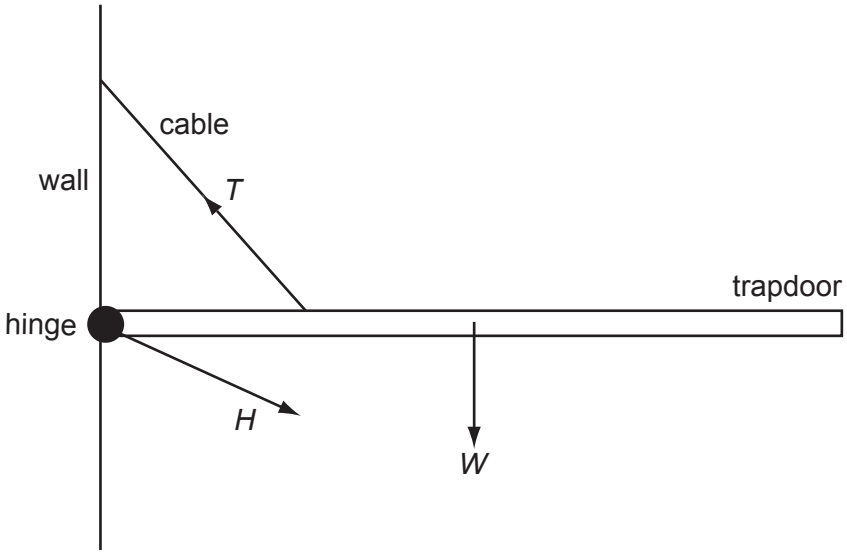

Which list gives the three forces in **increasing** order of magnitude?

A *H*,*T*,*W** **B** *T*,*H*,*W** **C** *W*,*H*,*T** **D** *W*,*T*,*H*

Space for working

17 A solid rubber ball has a diameter of 8.0 cm. It is released from rest with the top of the ball 80 cm above a horizontal surface. It falls vertically and then bounces back up so that the maximum height reached by the top of the ball is 45 cm, as shown.

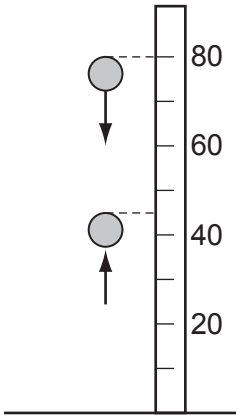

If the kinetic energy of the ball is 0.75 J just before it strikes the surface, what is its kinetic energy just after it leaves the surface?

A 0.36 J **B** 0.39 J **C** 0.40 J **D** 0.42 J

Space for working

© UCLES 2013

18 A wind turbine has blades that sweep an area of $2000\,m^2$. It converts the power available in the wind to electrical power with an efficiency of 50%.

What is the electrical power generated if the wind speed is $10\,m\,s^{-1}$? (The density of air is $1.3\,kg\,m^{-3}$.)

A 130 kW **B** 650 kW **C** 1300 kW **D** 2600 kW

19 The diagram shows a wheel of circumference 0.30 m. A rope is fastened at one end to a force meter. The rope passes over the wheel and supports a freely hanging load of 100 N. The wheel is driven by an electric motor at a constant rate of 50 revolutions per second.

When the wheel is turning at this rate, the force meter reads 20 N.

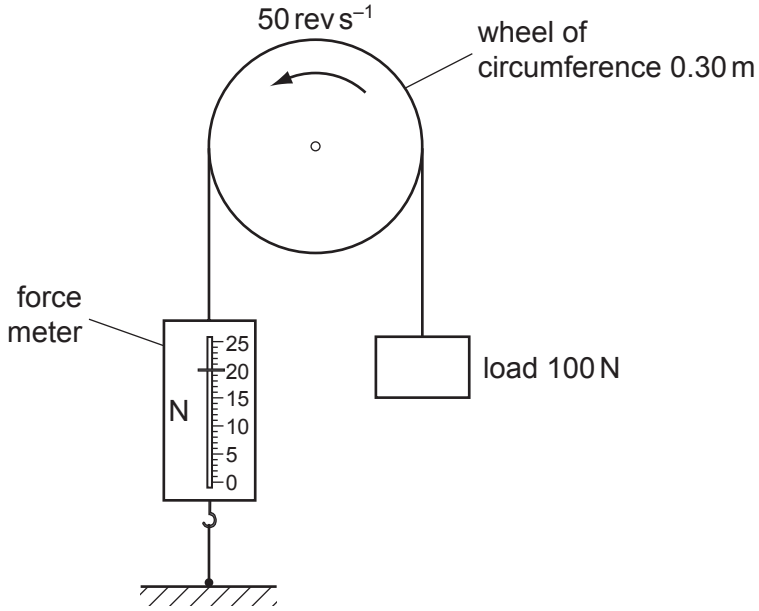

What is the output power of the motor?

A 0.3 kW **B** 1.2 kW **C** 1.8 kW **D** 3.8 kW

Space for working

20 Which row correctly states the characteristics of the process of evaporation?

	requires heat energy	occurs only at a particular temperature	can cause a change of temperature
A	✓	✓	✗
B	✓	✗	✓
C	✗	✓	✗
D	✗	✗	✓

21 A bore-hole of depth 2000 m contains both oil and water as shown. The pressure due to the liquids at the bottom of the bore-hole is 17.5 MPa. The density of the oil is 830 kg m^{-3} and the density of the water is 1000 kg m^{-3}.

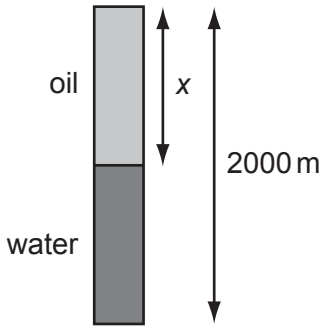

What is the depth *x* of the oil?

A 907 m **B** 1000 m **C** 1090 m **D** 1270 m

Space for working

22 The stress-strain graphs for four different materials are shown below.

Which diagram shows the stress-strain graph for a ductile metal?

A

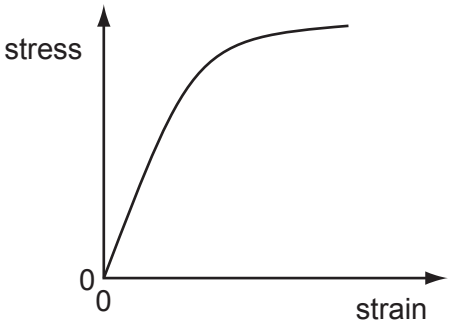

B

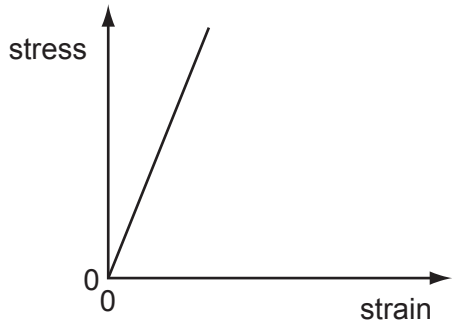

C

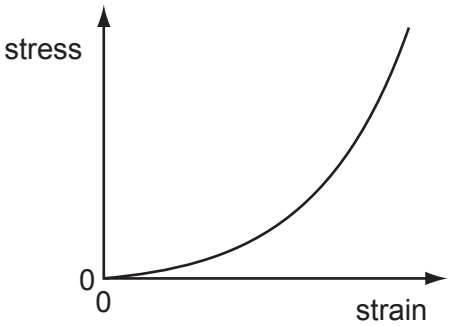

D

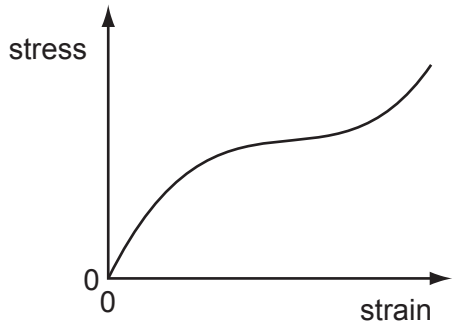

Space for working

23 A number of identical springs, each having the same spring constant, are joined in four arrangements. A different load is applied to each arrangement.

Which arrangement has the largest extension?

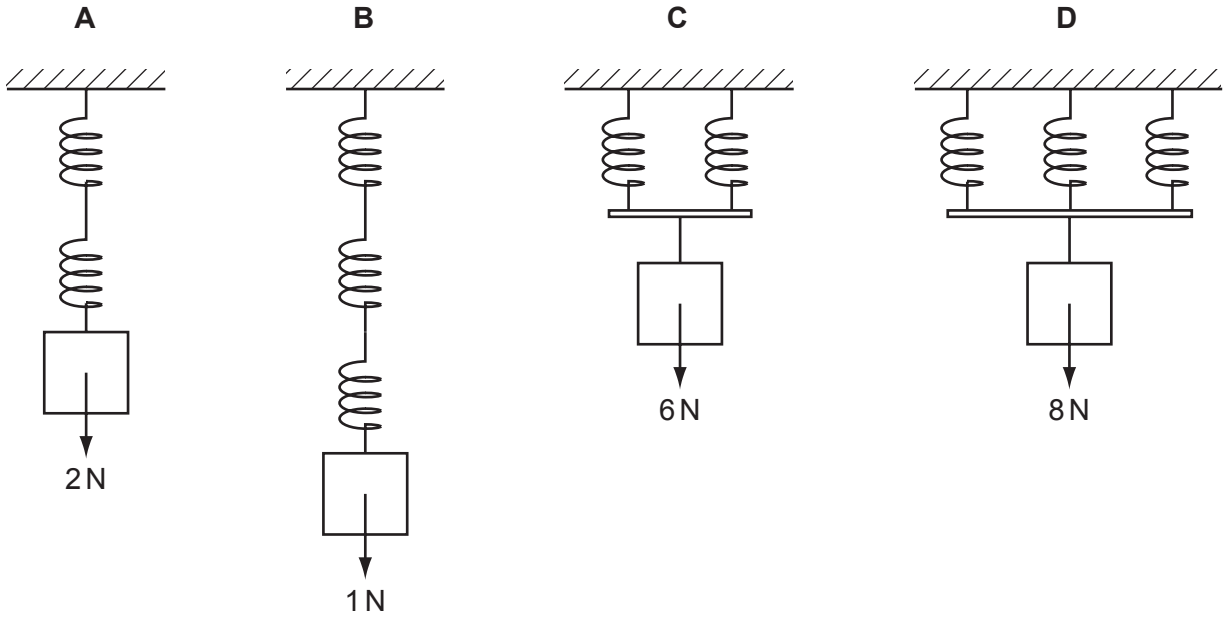

24 A light wave of amplitude A is incident normally on a surface of area S. The power per unit area reaching the surface is P.

The amplitude of the light wave is increased to $2A$. The light is then focussed on to a smaller area $\frac{1}{3}S$.

What is the power per unit area on this smaller area?

A $36P$

B $18P$

C $12P$

D $6P$

Space for working

© UCLES 2013

25 A wave has a speed of $340\,m\,s^{-1}$ and a period of 0.28 ms.

What is its wavelength?

A 0.095 m **B** 95 m **C** 1.2×10^3 m **D** 1.2×10^6 m

26 Which line in the table summarises the change in wave characteristics on going from infra-red to ultraviolet in the electromagnetic spectrum?

	frequency	speed in a vacuum
A	decreases	decreases
B	decreases	remains constant
C	increases	remains constant
D	increases	increases

27 Light of wavelength 600 nm is incident on a pair of slits. Fringes with a spacing of 4.0 mm are formed on a screen.

What will be the fringe spacing when the wavelength of the light is changed to 400 nm and the separation of the slits is doubled?

A 1.3 mm

B 3.0 mm

C 5.3 mm

D 12 mm

Space for working

28 The speed of a transverse wave on a stretched string can be changed by adjusting the tension of the string. A stationary wave pattern is set up on a stretched string using an oscillator set at a frequency of 650 Hz.

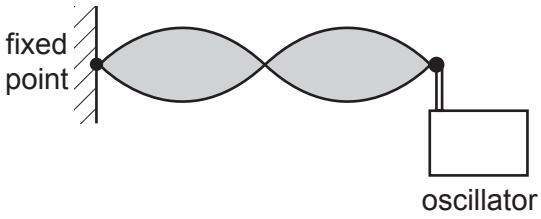

How must the wave be changed to maintain the same stationary wave pattern if the applied frequency is increased to 750 Hz?

A Decrease the speed of the wave on the string.

B Decrease the wavelength of the wave on the string.

C Increase the speed of the wave on the string.

D Increase the wavelength of the wave on the string.

29 Noise reduction headphones actively produce their own sound waves in order to cancel out external sound waves.

A microphone in the headphones receives waves of one frequency. A loudspeaker in the headphones then produces a wave of that frequency but of a different phase.

What is the phase difference between the external sound wave and the wave produced by the loudspeaker in the headphones?

A 90° **B** 180° **C** 270° **D** 360°

Space for working

30 A beam of electrons is directed into an electric field and is deflected by it.

Diagram 1 represents an electric field in the plane of the paper.
Diagram 2 represents an electric field directed perpendicular to the plane of the paper.

The lines **A**, **B**, **C** and **D** represent possible paths of the electron beam. All paths are in the plane of the paper.

Which line best represents the path of the electrons inside the field?

diagram 1

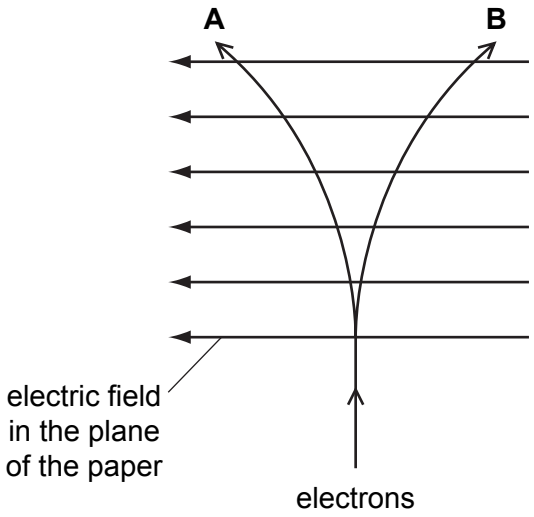

diagram 2

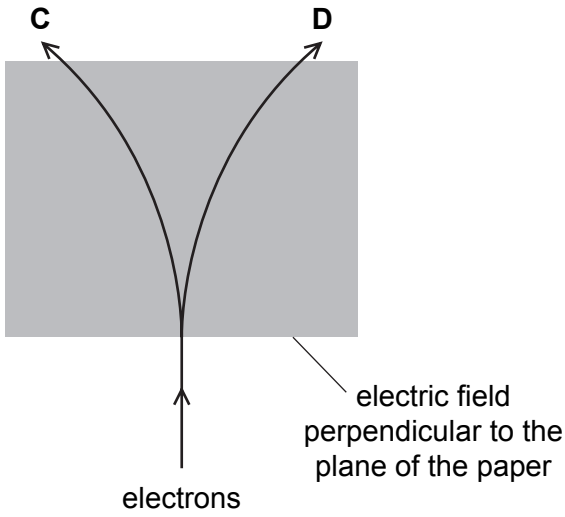

Space for working

31 Two oppositely-charged parallel plates are arranged as shown.

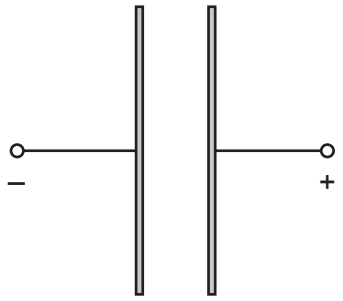

An electron is released from rest from the surface of the negatively-charged plate.

The electron travels from the negatively-charged plate towards the positively-charged plate.

Which graph shows how the force *F* on the electron varies with its distance *x* from the negative plate?

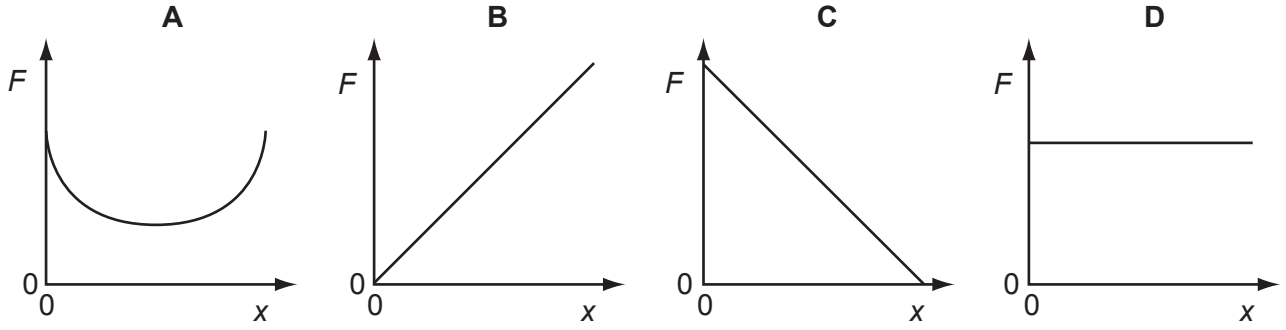

32 A power supply of electromotive force (e.m.f.) 12 V and internal resistance 2.0 Ω is connected in series with a 13 Ω resistor.

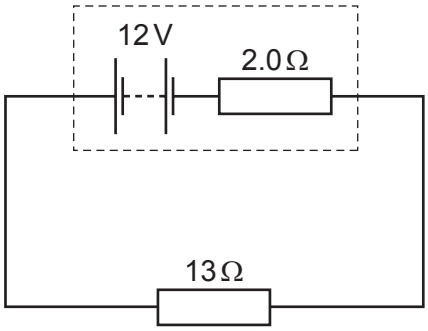

What is the power dissipated in the 13 Ω resistor?

A 8.3 W **B** 9.6 W **C** 10 W **D** 11 W

Space for working

33 When a battery is connected to a resistor, the battery gradually becomes warm. This causes the internal resistance of the battery to increase whilst its e.m.f. stays unchanged.

As the internal resistance of the battery increases, how do the terminal potential difference and the output power change, if at all?

	terminal potential difference	output power
A	decrease	decrease
B	decrease	unchanged
C	unchanged	decrease
D	unchanged	unchanged

34 The principles of conservation of which two quantities are associated with Kirchhoff's first and second laws?

	first law	second law
A	charge	energy
B	charge	voltage
C	energy	charge
D	voltage	charge

Space for working

35 A circuit is set up as shown, supplied by a 3 V battery. All resistances are 1 kΩ.

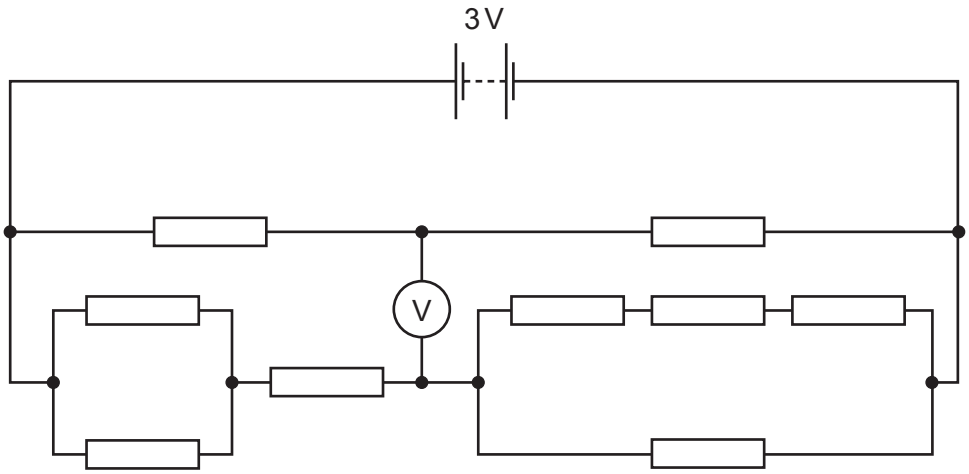

What will be the reading on the voltmeter?

A 0 **B** 0.5 V **C** 1.0 V **D** 1.5 V

36 The diagram shows an incorrectly connected circuit. The ammeter has a resistance of 0.1 Ω and the voltmeter has a resistance of 1 MΩ.

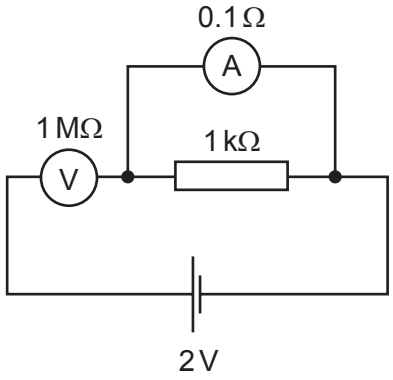

Which statement is correct?

A The ammeter reads 2 mA.

B The ammeter reads 20 A.

C The voltmeter reads zero.

D The voltmeter reads 2 V.

Space for working

© UCLES 2013

37 A 12 V battery is in series with an ammeter, a 2 Ω fixed resistor and a 0 – 10 Ω variable resistor. A high-resistance voltmeter is connected across the variable resistor.

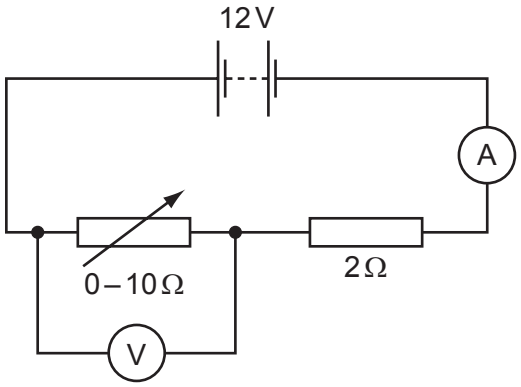

The resistance of the variable resistor is changed from zero to its maximum value.

Which graph shows how the potential difference (p.d.) measured by the voltmeter varies with the current measured by the ammeter?

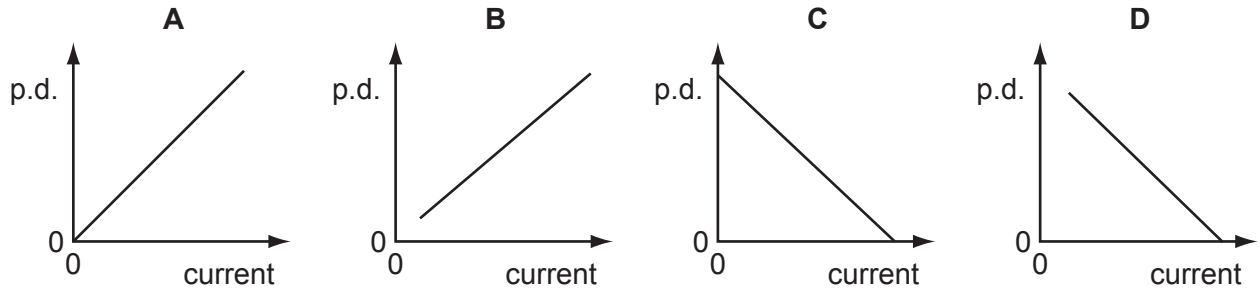

38 A nickel nucleus $^{59}_{28}\text{Ni}$ can be transformed by a process termed K-capture. In this process the nucleus absorbs an orbital electron.

If no other process is involved, what is the resulting nucleus?

A $^{58}_{28}\text{Ni}$ **B** $^{58}_{27}\text{Co}$ **C** $^{59}_{27}\text{Co}$ **D** $^{59}_{29}\text{Cu}$

Space for working

39 It was once thought that the mass of an atom is spread uniformly through the volume of the atom. When α-particles are directed at a piece of gold foil, the results led scientists to believe instead that nearly all the mass of the gold atom is concentrated at a point inside the atom.

Which effect is possible **only** if nearly all the mass of the gold atom is concentrated at a point?

A a few α-particles bounce back

B most α-particles are only slightly deflected

C some α-particles pass through without any deflection

D some α-particles are absorbed

40 Which pair of nuclei are isotopes of one another?

	nucleon number	number of neutrons
A	186	112
	180	118
B	186	112
	182	108
C	184	110
	187	110
D	186	110
	186	112

Space for working

Permission to reproduce items where third-party owned material protected by copyright is included has been sought and cleared where possible. Every reasonable effort has been made by the publisher (UCLES) to trace copyright holders, but if any items requiring clearance have unwittingly been included, the publisher will be pleased to make amends at the earliest possible opportunity.

University of Cambridge International Examinations is part of the Cambridge Assessment Group. Cambridge Assessment is the brand name of University of Cambridge Local Examinations Syndicate (UCLES), which is itself a department of the University of Cambridge.